31 March 2026
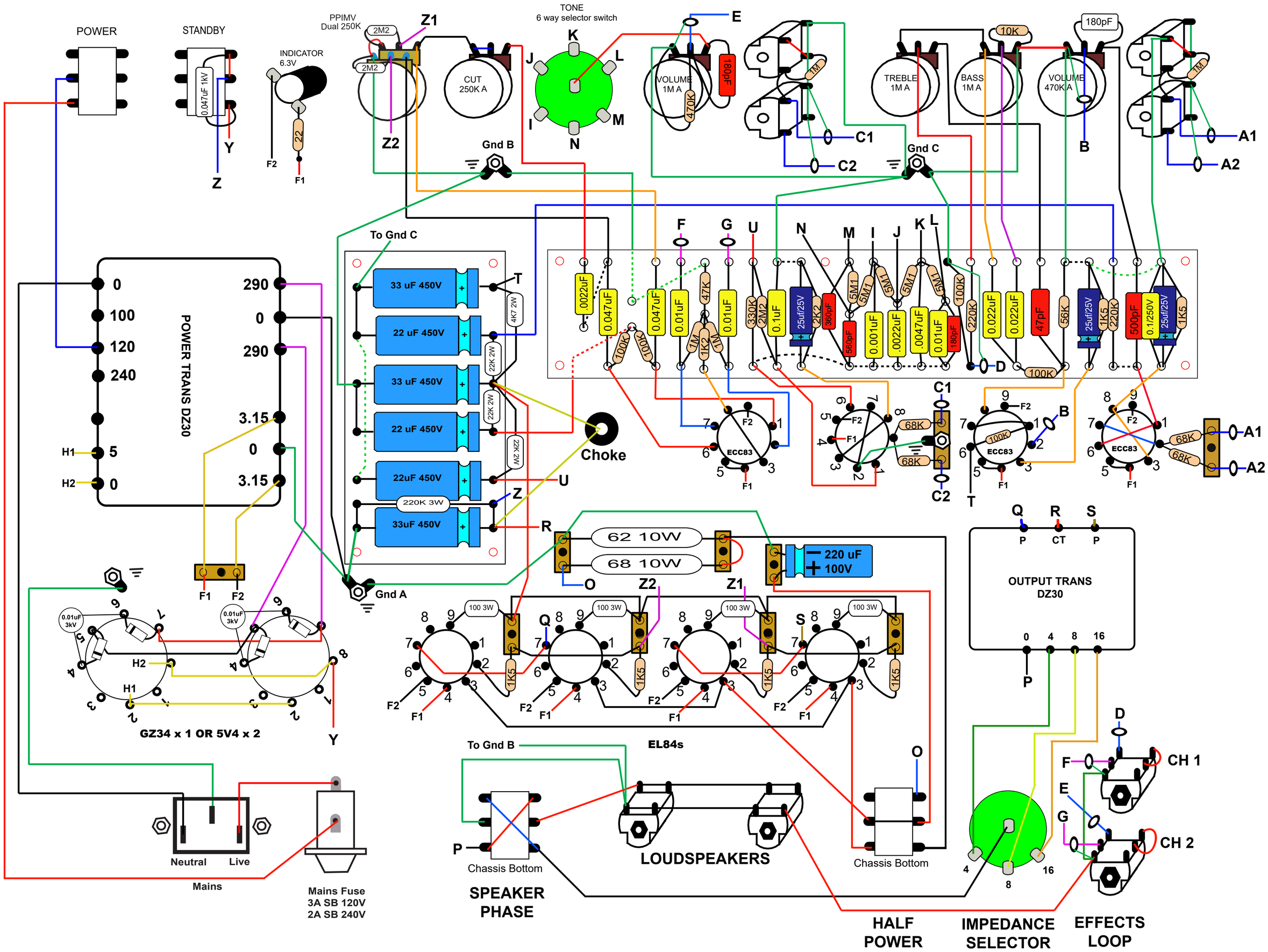
CERIATONE DZ30 LAYOUT