01 March 2026
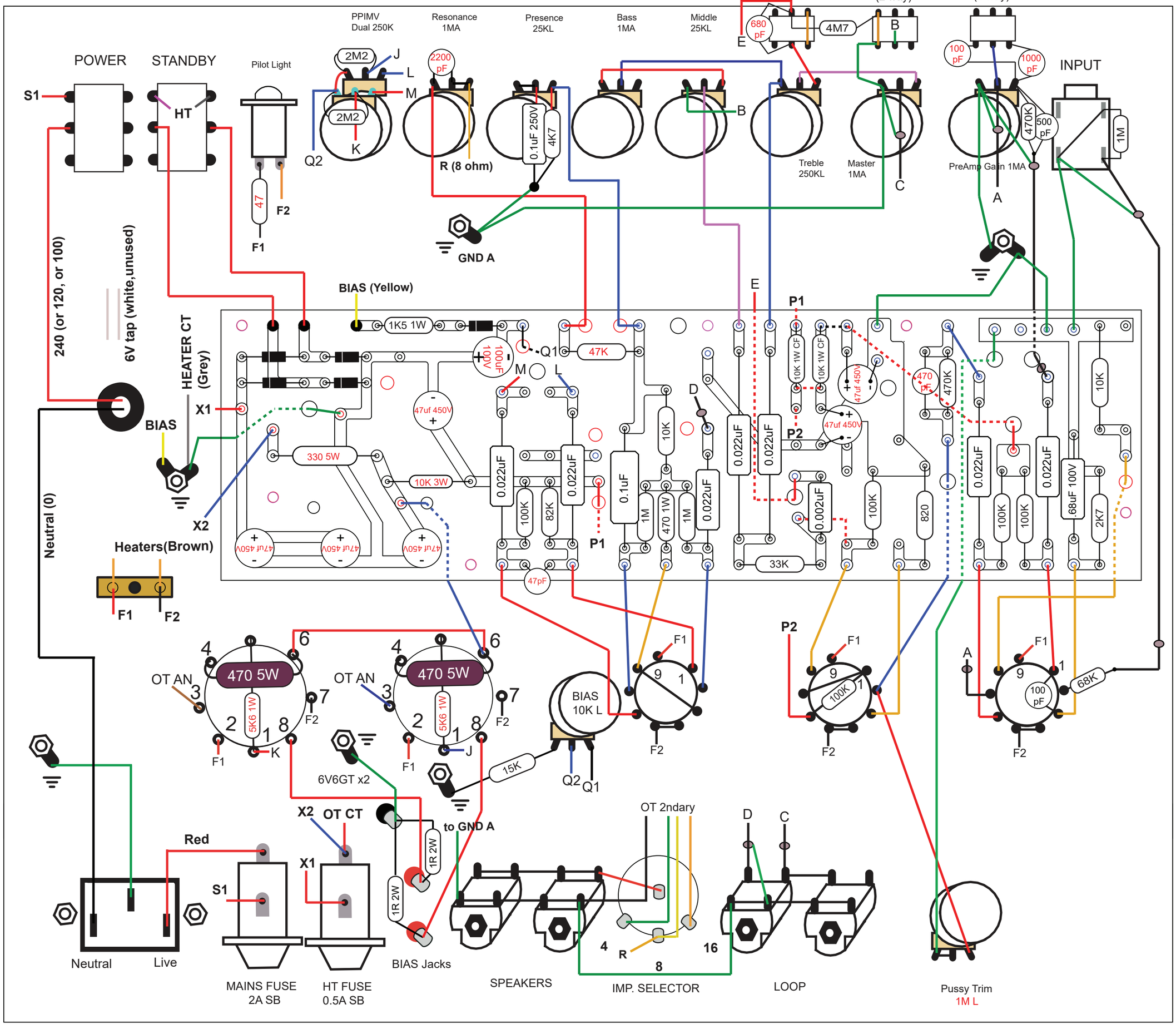
CERIATONE 2202 - 80s Rock 20W