Revised 1 March, 2026
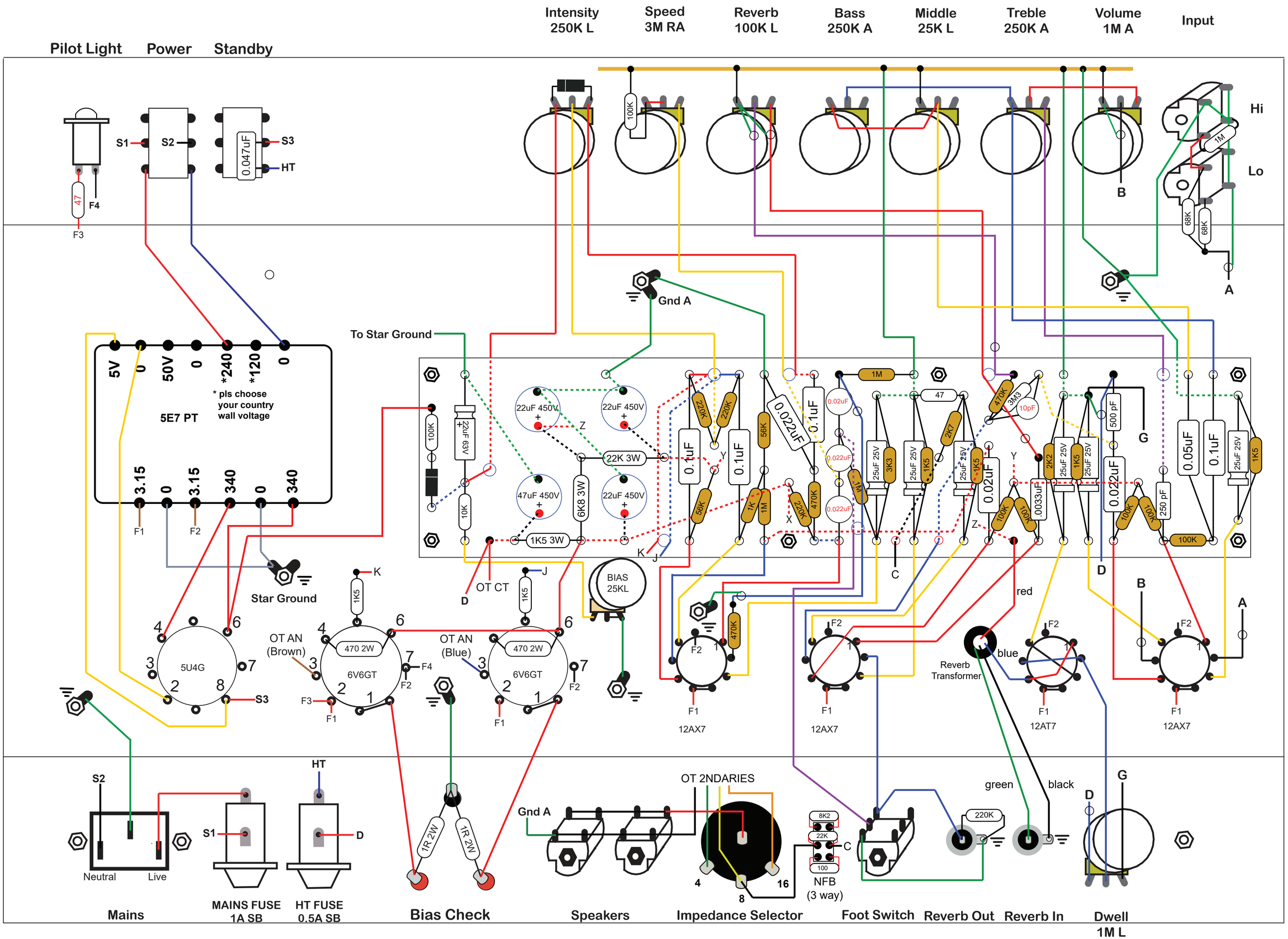
CERIATONE PRINCE TUT REVERB 20