Revised 1 March, 2026

CERIATONE King Tut Reverb 20

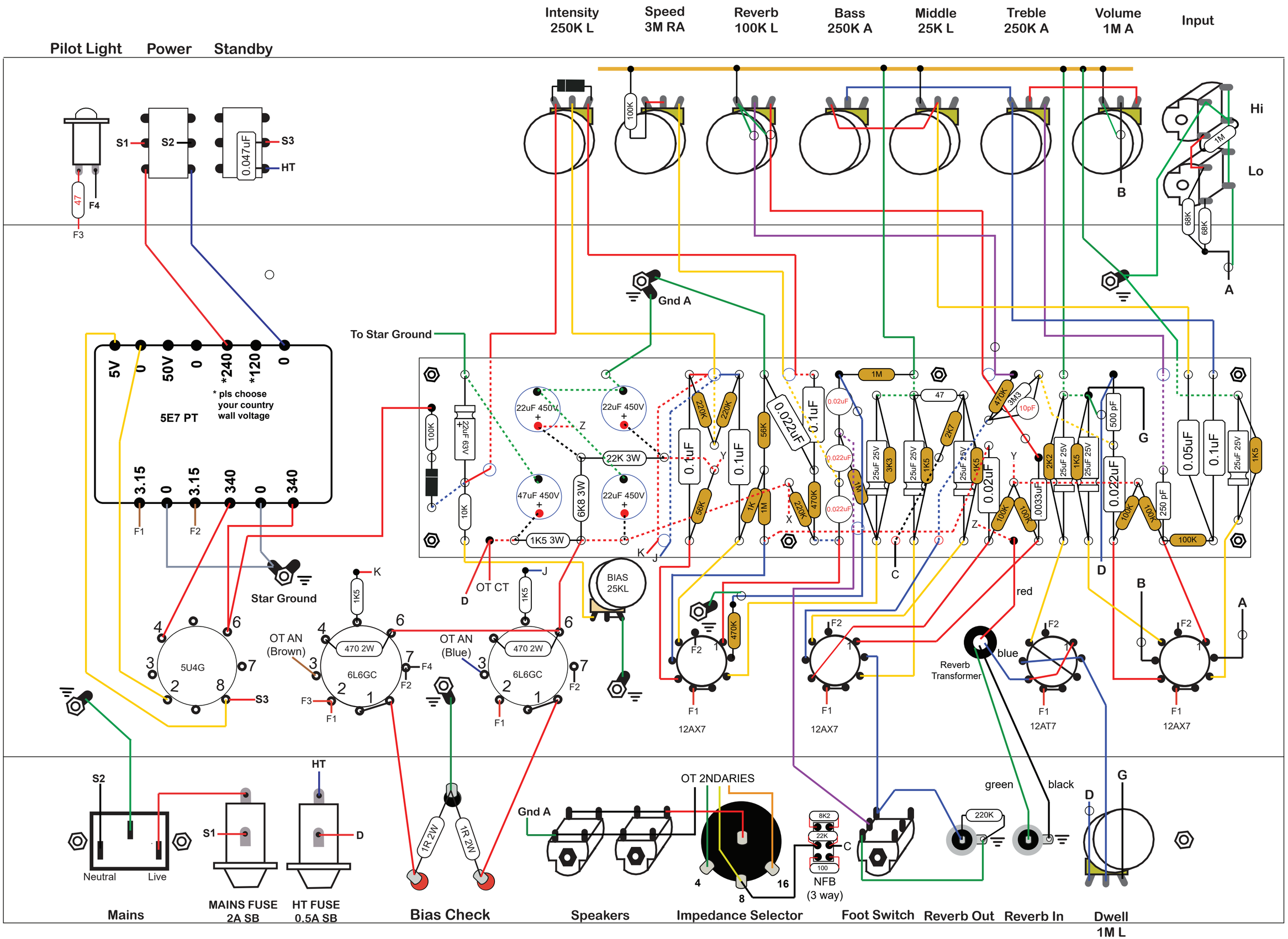

OT: Use Bassman 5F6A OT