Revised 01 FEB, 2026
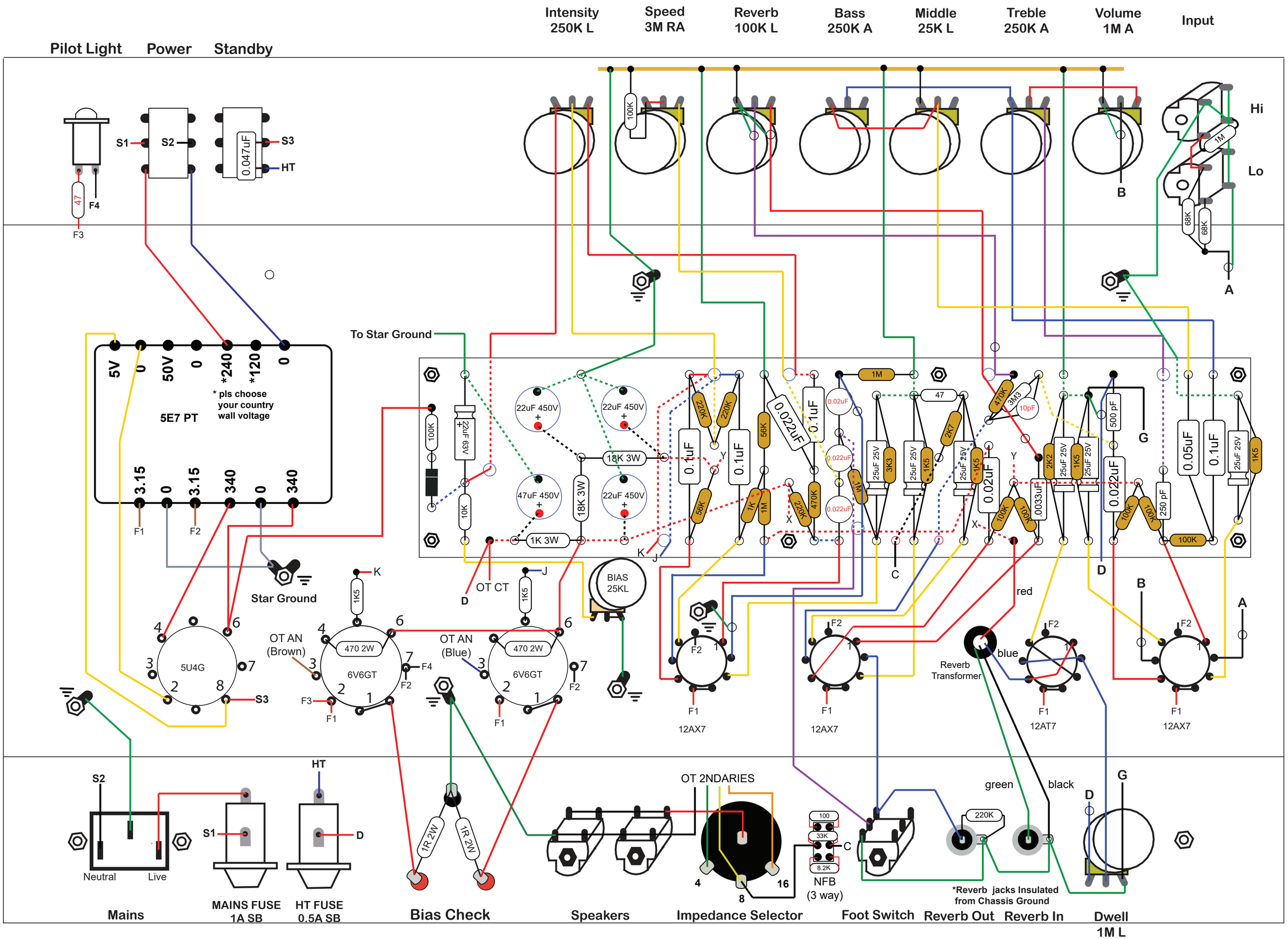
CERIATONE PRINCE TUT REVERB 20