17 Jan 2026
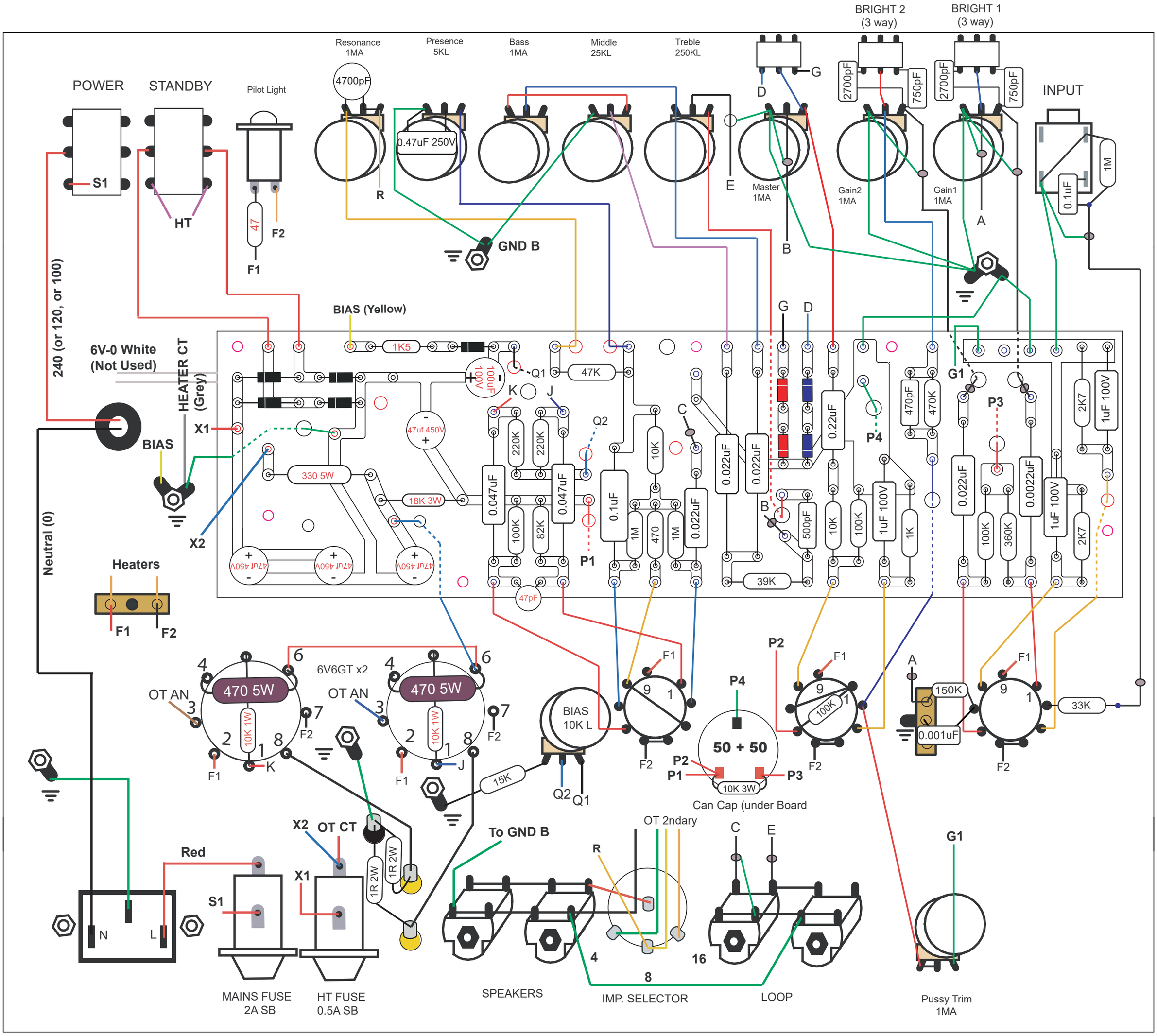
CERIATONE Son Of Yeti 20