CERIATONE JCM101"800 + PLEXI"

25 MAY 2024
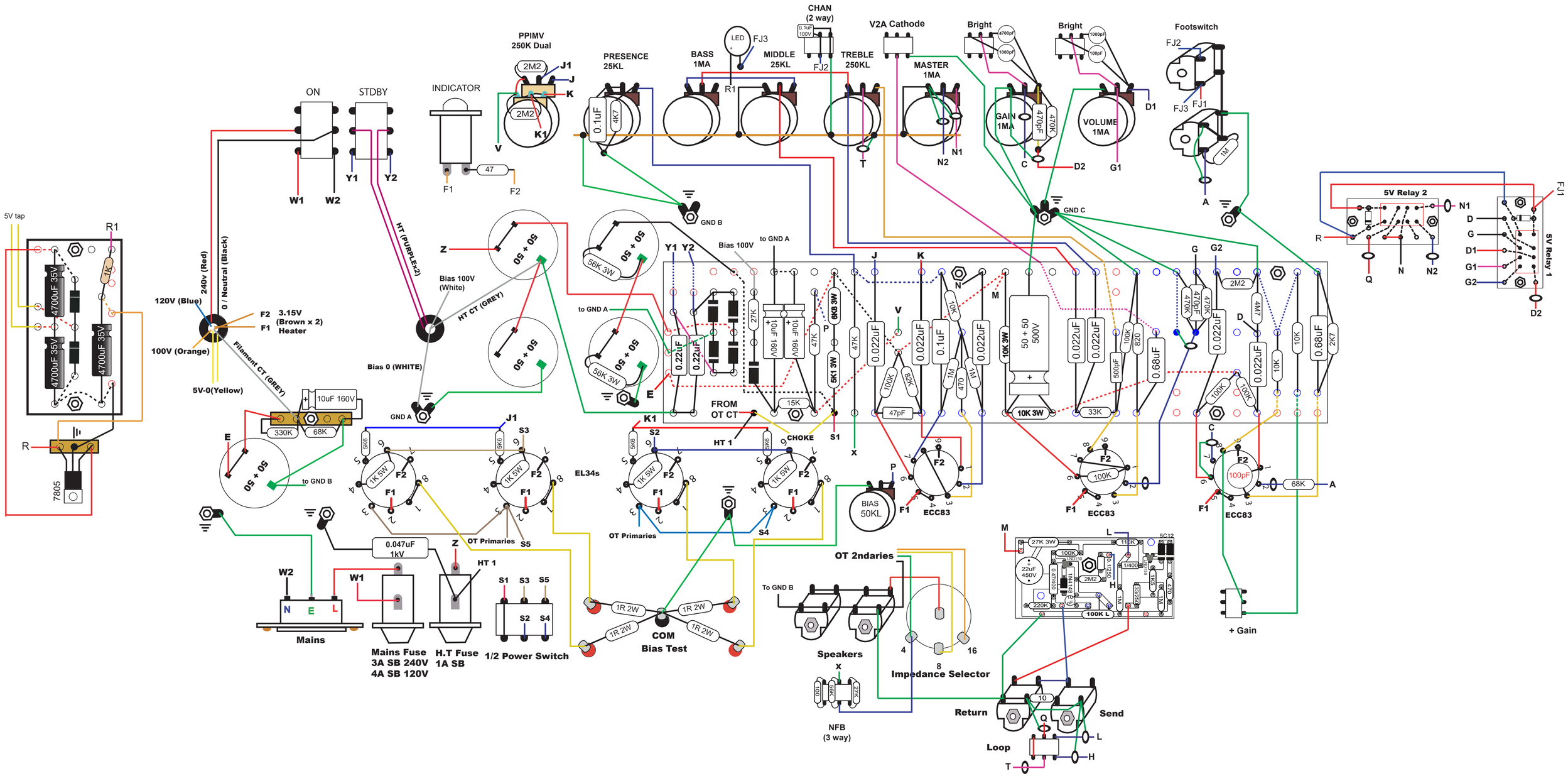
JCM800 + PLEXI (FOOTSWITCHABLE), WITH BUFFERED LOOP, PPIMV, EXTRA GAIN AND NFB SWITCHES