Revised 15 March 2024
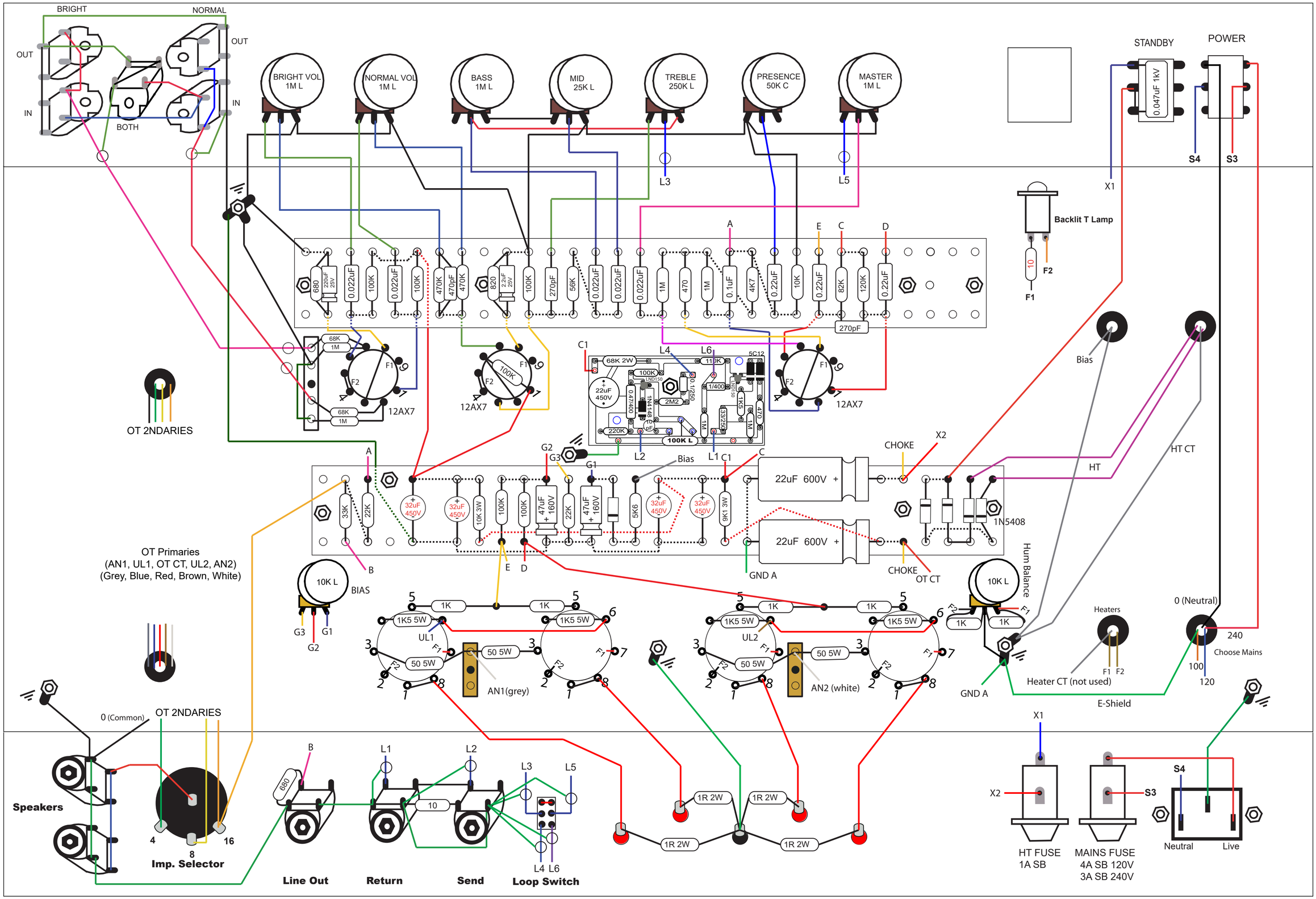
CERIA TONE Model Tee 150W Layout