Revised Jan 1 2024
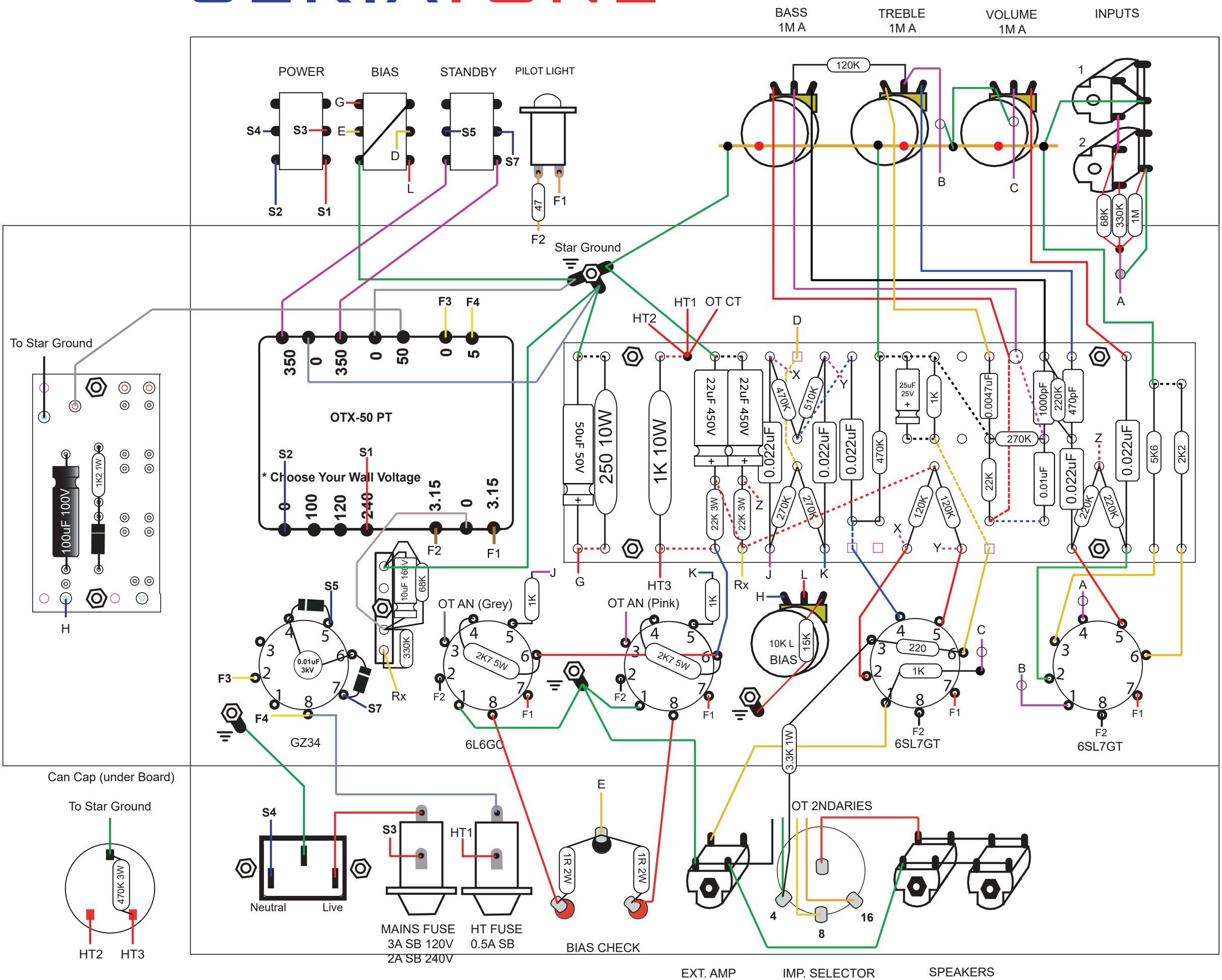
CERIATONE AUNT PEG